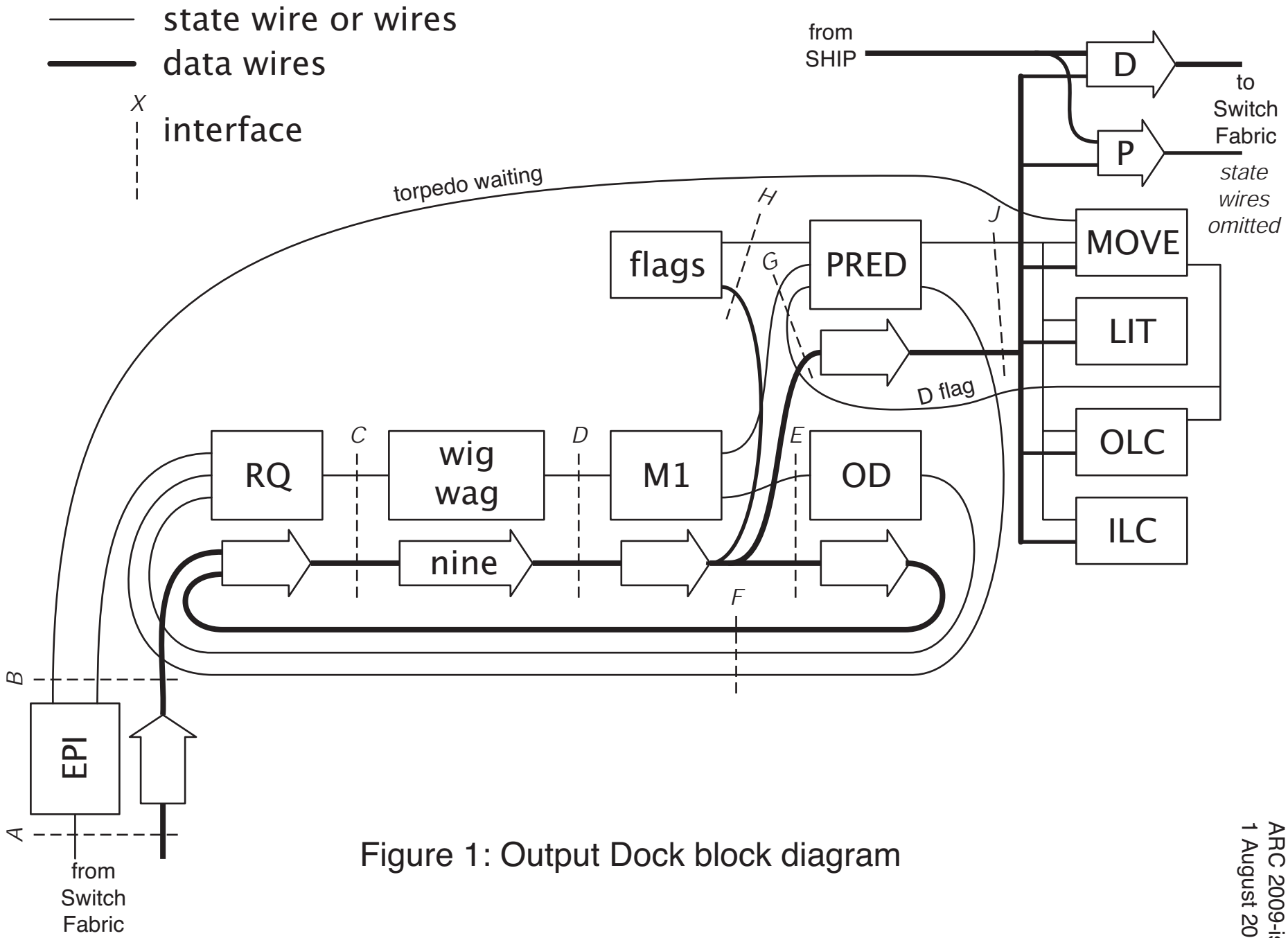

Figure 1: Output Dock block diagram